REF. 1501

RUBBER EXPANSION JOINT EPDM WITH SWIVELING FLANGES PN10/16

EPDM expansion joint with swiveling flanges to absorb vibrations and noises on water distribution, heating and HVAC networks.
Not advisable for hydrocarbons, greasy product and abrasive products.
EPDM single sphere body and floating flanges in electro galvanized carbon steel.
For linear and angular compansion.

Size :	DN32 to DN600
Connection :	Flanges PN10/16
Min Temperature :	-10°C
Max Temperature :	+100°C
Max Pressure :	16 Bars up to DN300
Specifications :	Absorb vibrations and noises Linear and angular compansion Single sphere EPDM tube Swiveling flanges
Materials :	Electro galvanized steel flanges

Information provided as an indication and subject to possible modification

REF. 1501

RUBBER EXPANSION JOINT EPDM WITH SWIVELING FLANGES PN10/16

SPECIFICATIONS :

- Absorb vibration, noises and expansion
- Linear and angular compansion
- Tube EPDM (EPDM marking)
- Electro galvanized steel flanges PN10/16
- Expansion limiter (option)

Marking example (EPDM) :

USE :

- Water distribution, heating and HVAC
- Min and max Temperature Ts : - 10°C to + 100°C
- Max Pressure Ps : 16 bars up to DN300 (see graph) , 10 bars over

PRESSURE / TEMPERATURE GRAPH (STEAM EXCLUDED) DN 32 – DN 300 :

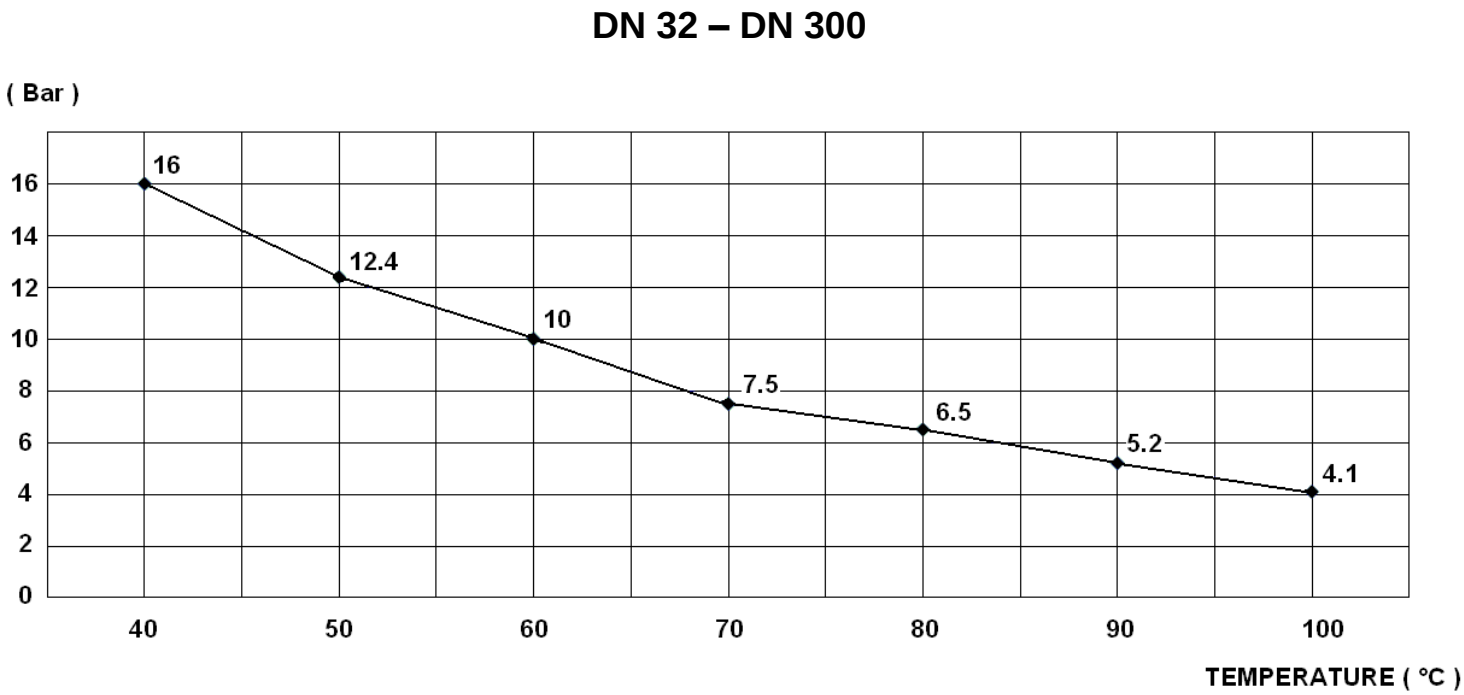

Information provided as an indication and subject to possible modification

RUBBER EXPANSION JOINT EPDM WITH SWIVELING FLANGES PN10/16

PRESSURE / TEMPERATURE GRAPH (STEAM EXCLUDED) DN 350 – DN 600 :

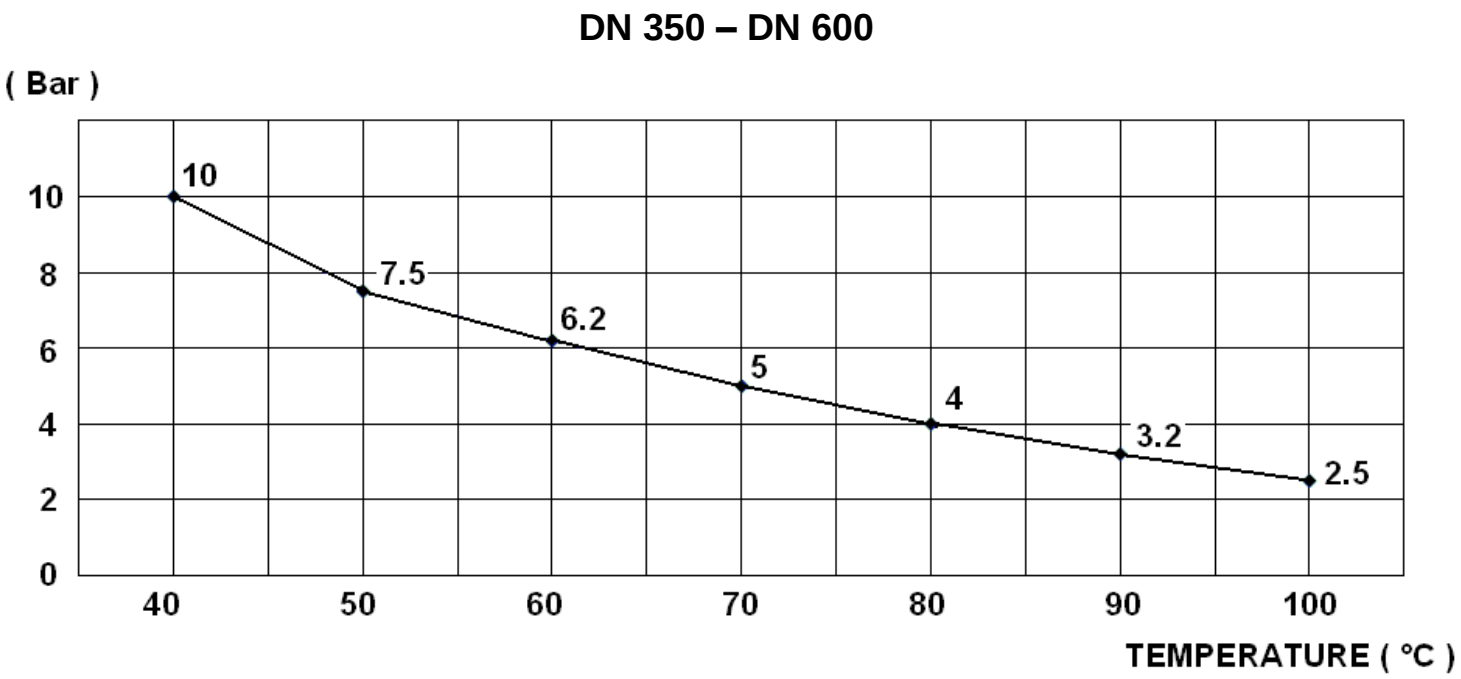

RANGE :

- EPDM expansion joint with floating steel flanges PN10/16 from DN32 to DN150, PN10 over **Ref. 1501**
- Expansion limiter (with 2 studs and 4 plates included) from DN 32 to DN 600 **Ref. 98604**

Information provided as an indication and subject to possible modification

REF. 1501

RUBBER EXPANSION JOINT EPDM WITH SWIVELING FLANGES PN10/16

MATERIALS :

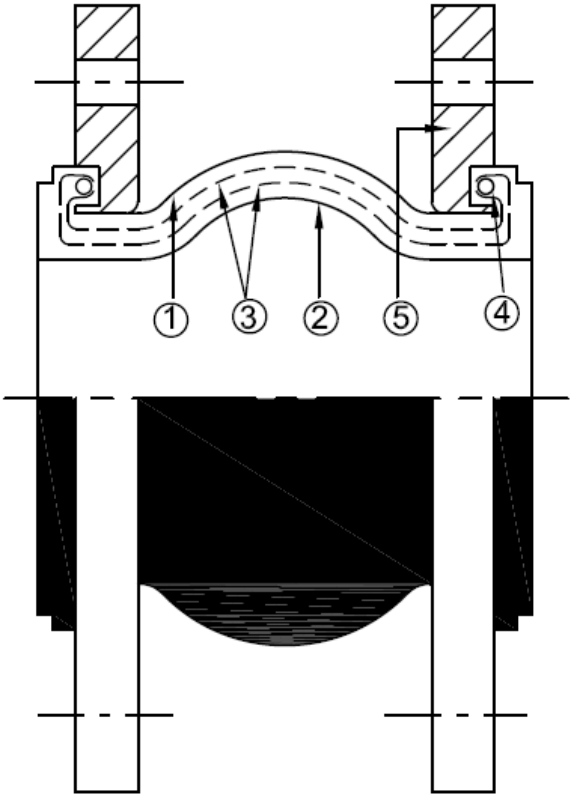

Item	Designation	Materials
1	Cover	EPDM
2	Inner tube	EPDM
3	Reinforcement	Nylon cord
4	Brace	Hard steel
5	Flanges	Electro galvanized steel

Information provided as an indication and subject to possible modification

REF. 1501

RUBBER EXPANSION JOINT EPDM WITH SWIVELING FLANGES PN10/16

SIZE (in mm) :

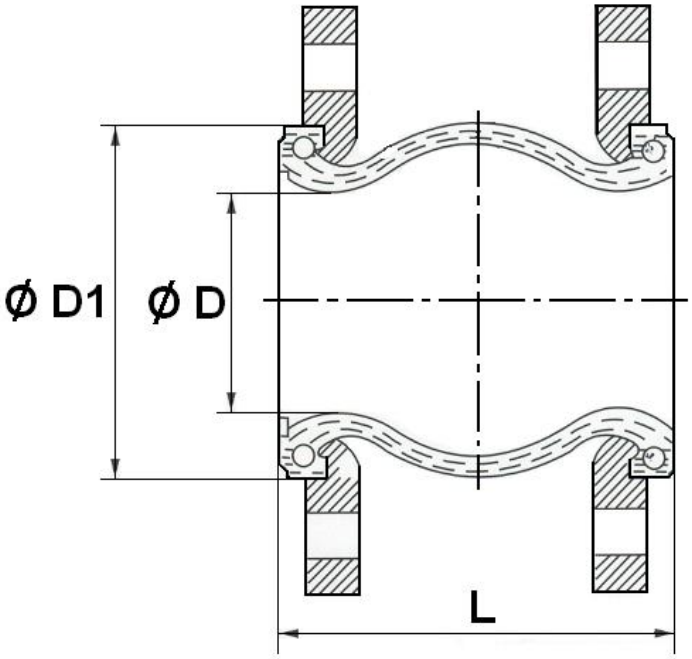

DN	32	40	50	65	80	100	125	150
L	95	95	105	115	130	135	170	180
Ø D	29	37	47	57	74	91	119	145
Ø D1	69	79	90	108	124	145	179	209
Weight (Kg)	2.85	3.15	4.15	4.95	6.05	6.95	9.6	11.85
Ref.	1501032	1501040	1501050	1501065	1501080	1501100	1501125	1501150

DN	200	250	300	350	400	450	500	600
L	205	240	260	265	265	200	200	250
Ø D	199	241	294	331	372	431	486	591
Ø D1	261	320	370	420	473	532	587	685
Weight (Kg)	16.9	22.6	25.5	37.8	47.85	55.18	62.35	82.75
Ref.	1501200	1501250	1501300	1501350	1501400	1501450	1501500	1501600

Information provided as an indication and subject to possible modification

RUBBER EXPANSION JOINT EPDM WITH SWIVELING FLANGES PN10/16

FLANGES SIZE PN10/16 UP TO DN150, PN10 OVER (in mm) :

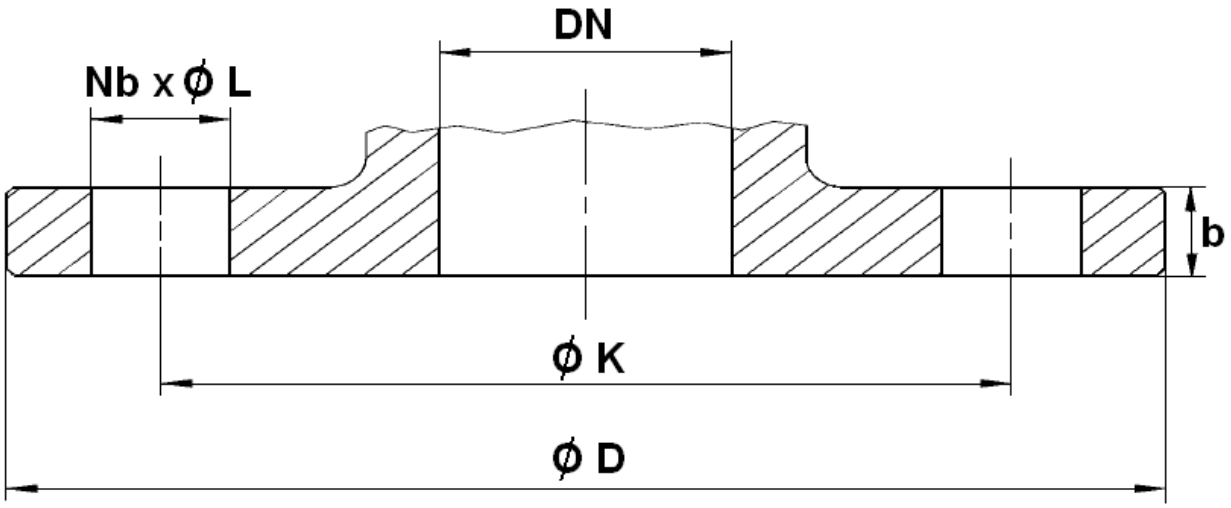

DN	32	40	50	65	80	100	125	150	200	250	300
Ø D	140	150	165	185	200	220	250	285	340	395	445
Ø K	100	110	125	145	160	180	210	240	295	350	400
Nb x Ø L	4 x 19	4 x 19	4 x 19	4 x 19	8 x 19	8 x 19	8 x 19	8 x 23	8 x 23	12 x 23	12 x 23
b	14	14	15	15	17	17	19	19	20	22	22

DN	350	400	450	500	600
Ø D	505	565	615	670	780
Ø K	460	515	565	620	725
Nb x Ø L	16 x 23	16 x 28	20 x 28	20 x 28	20 x 31
b	26	28	28	30	32

Information provided as an indication and subject to possible modification

REF. 1501

RUBBER EXPANSION JOINT EPDM WITH SWIVELING FLANGES PN10/16

MOVEMENTS (in mm) :

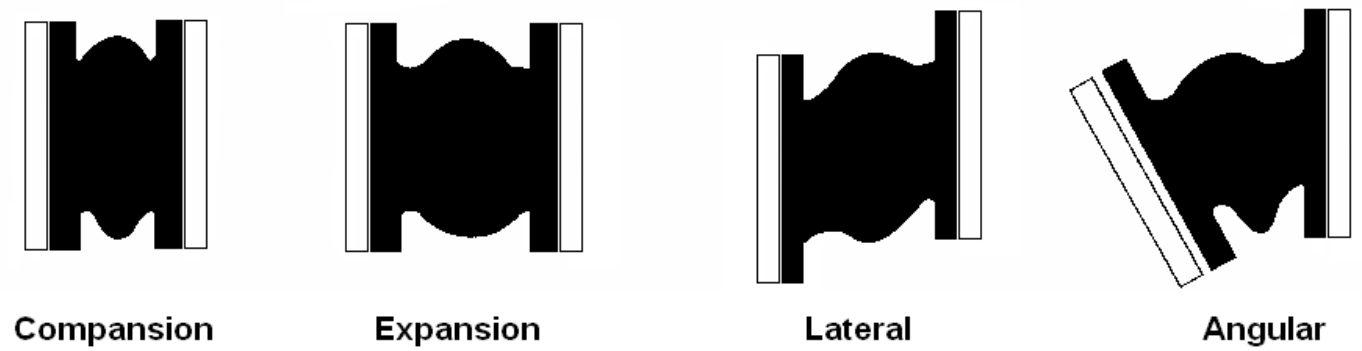

DN	32	40	50	65	80	100	125	150	200	250	300	350	400	450	500	600
Compansion	8	8	8	12	12	12	16	16	20	20	20	25	25	20	20	20
Expansion	4	4	4	6	6	10	10	10	14	14	14	16	16	12	12	12
Lateral	8	8	8	10	10	12	12	12	18	18	18	18	18	18	18	18
Angular	15°	15°	15°	15°	15°	15°	15°	15°	15°	15°	15°	15°	15°	15°	15°	15°

Maximum movements can't be applied together

STANDARDS :

- Manufacturer certified ISO 9001 : 2015
- DIRECTIVE 2014/68/EU : Products excluded from directive (Article 4, § 3)
- Flanges according to EN 1092-1 PN10/16
- Approval certificate **Marine LLOYD'S REGISTER**

ADVICE : Our opinion and our advice are not guaranteed and SFERACO shall not be liable for the consequences of damages.
The customer must check the right choice of the products with the real service conditions.

Information provided as an indication and subject to possible modification