REF. 452

STAINLESS STEEL F316 FORGED GLOBE VALVE CLASS 800 TRIM10 SW

Forged stainless steel globe valve TRIM10 SW Class 800 standard bore for petroleum industry, steam, oil and gas and high pressure.
Rising and rotating stem (OS&Y) with bolted bonnet.
Graphite packing and stainless steel + graphite bonnet gasket.
Compatible with explosive atmosphere, ATEX Zone 1&21 and Zone 2&22.

Certificate 3.1

PED 2014/68/UE

Size :	DN10 to DN50 (NPS 3/8" to 2")
Connection :	SW
Min Temperature :	-49°C
Max Temperature :	+538°C
Max Pressure :	132 Bars (Class 800)
Specifications :	Rising and rotating stem (OS&Y) Bolted bonnet and gland pack Standard bore
Materials :	Forged stainless steel ASTM A182 F316

Information provided as an indication and subject to possible modification

STAINLESS STEEL F316 FORGED GLOBE VALVE CLASS 800 TRIM10 SW

SPECIFICATIONS :

- Respect the flow direction (indicated by the arrow)
- Standard bore
- Rising rotating stem (OS&Y)
- Bolted bonnet and gland pack
- Forged stainless steel F316
- Trim 10 standard AISI 316
- Class 800

USE :

- Petroleum industry, steam, high pressure
- Min and max Temperature Ts : - 49°C to + 538°C
- Max Pressure Ps : 132 bars (see graph)

FLOW COEFFICIENT Kvs (M3 / h) :

DN (mm)	10	15	20	25	32	40	50
NPS (")	3/8"	1/2"	3/4"	1"	1"1/4	1"1/2	2"
Kvs (m3/h)	1.2	1.3	3.3	5.9	9.5	12.4	21.6

PRESSURE / TEMPERATURE RELATION :

Pressure (bar)	132.4	132.4	132.4	114.1	103.1	94.5	87.9	83.1	81.7	79.3	77.9	76.2	74.5	72.4	71	66.9
Temperature (°C)	-49	0	38	93,5	149	204,5	260	315,5	343,5	371	399	425	454.5	482	510	538

PRESSURE / TEMPERATURE GRAPH :

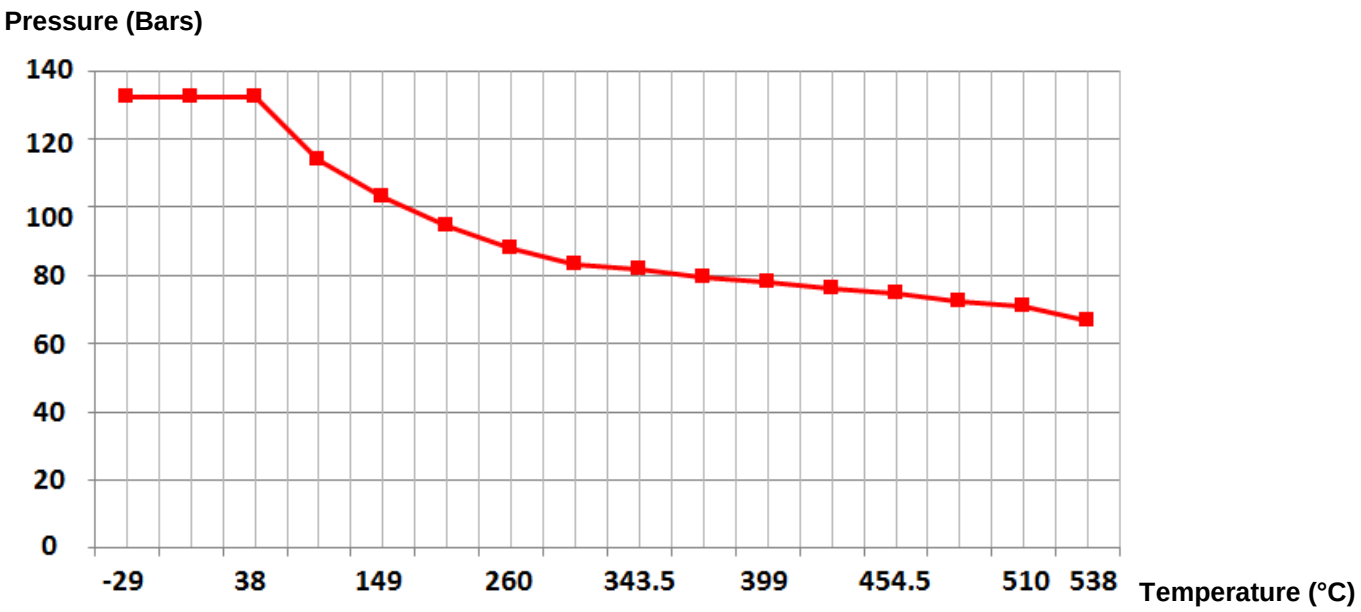

RANGE :

- Forged A182 F316 stainless steel globe valve TRIM 10 with Socket Welding ends **Ref.452** DN 10 to DN 50 (NPS 3/8“ to DN 2“)

Information provided as an indication and subject to possible modification

STAINLESS STEEL F316 FORGED GLOBE VALVE CLASS 800 TRIM10 SW

MATERIALS:

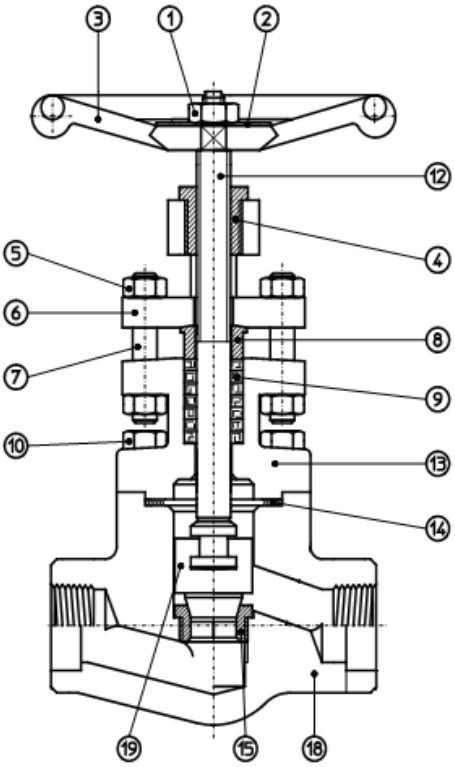

Item	Designation	Materials
1	Wheel nut	Carbon steel
2	Name plate	Aluminium
3	Handwheel	Carbon steel
4	Yoke nut	ASTM A582 type 303
5	Gland nut	ASTM A194 GR.8
6	Gland flange	ASTM A182 F304
7	Gland stud	ASTM A193 B8
8	Gland	ASTM A479 type 304
9	Packing	Graphite
10	Bolts	ASTM A193 B8
12	Stem	ASTM A479 type 316
13	Bonnet	ASTM A182 F316
14	Gasket	AISI 316 + graphite spiral wound
15	Seat	ASTM A479 type 316
18	Body	ASTM A182 F316
19	Disc	ASTM A479 type 316

Information provided as an indication and subject to possible modification

REF. 452

STAINLESS STEEL F316 FORGED GLOBE VALVE CLASS 800 TRIM10 SW

SIZE (in mm) :

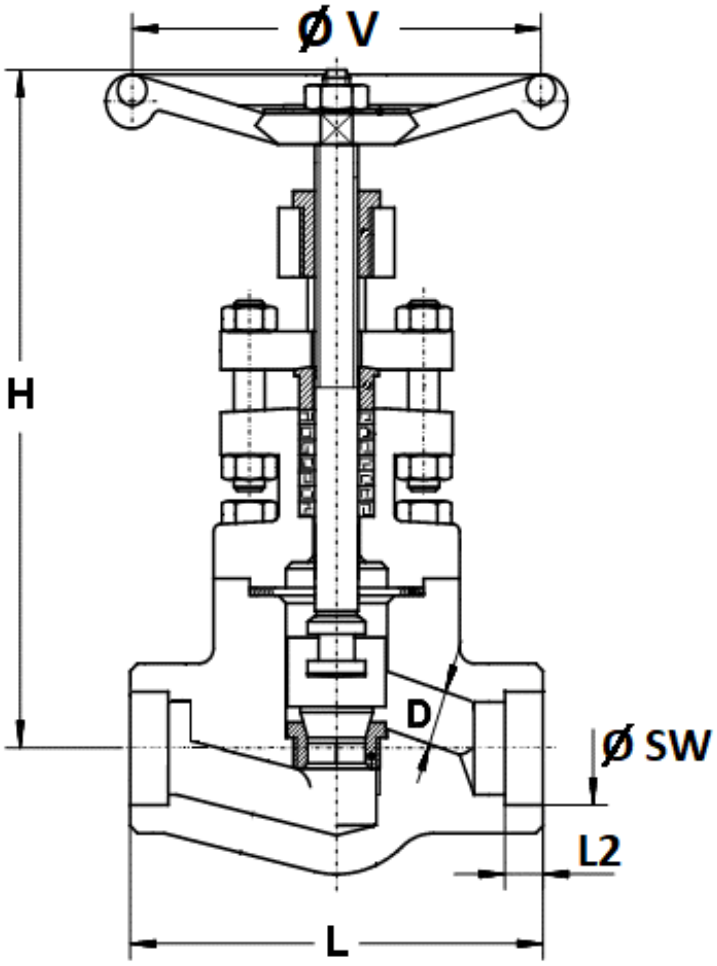

DN (mm)	10	15	20	25	32	40	50
NPS (")	3/8"	1/2"	3/4"	1"	1"1/4	1"1/2	2"
Ø D	9	9	13	17.5	22.5	29.5	35
L	80	80	90	110	127	155	170
H (opened)	148	148	165	180	213	248	257
Ø V	90	90	90	110	130	130	180
L2	11.1	12.7	14.5	16	17.5	19	22
Ø SW	17.6	21.8	27.2	33.9	42.7	48.8	61.2
Weight (in Kg)	1.9	1.9	2.18	3.52	5.3	7.3	11.3
Ref.	452010	452015	452020	452025	452032	452040	452050

Information provided as an indication and subject to possible modification

STAINLESS STEEL F316 FORGED GLOBE VALVE CLASS 800 TRIM10 SW

STANDARDS :

- Manufacturer certified **ISO 9001 : 2015**
- DIRECTIVE 2014/68/EU : **CE N° 0036**
  Risk category III module H
- Certificate 3.1 on request
- Designing according to **ISO 15761** and **API 602** 8th
- Pressure tests according to **API 598, table 6**
- Valves approved by the main oil industries (certificates on request)
- ATEX Group II Category 2 GD T3 Zone 1 & 21 Zone 2 &22 (optional marking) according to directive 2014/34/EU
- Socket welding ends according to **ISO 15761**

ADVICE : Our opinion and our advice are not guaranteed and Oktogon Kft. shall not be liable for the consequences of damages. The customer must check the right choice of the products with the real service conditions.

Information provided as an indication and subject to possible modification